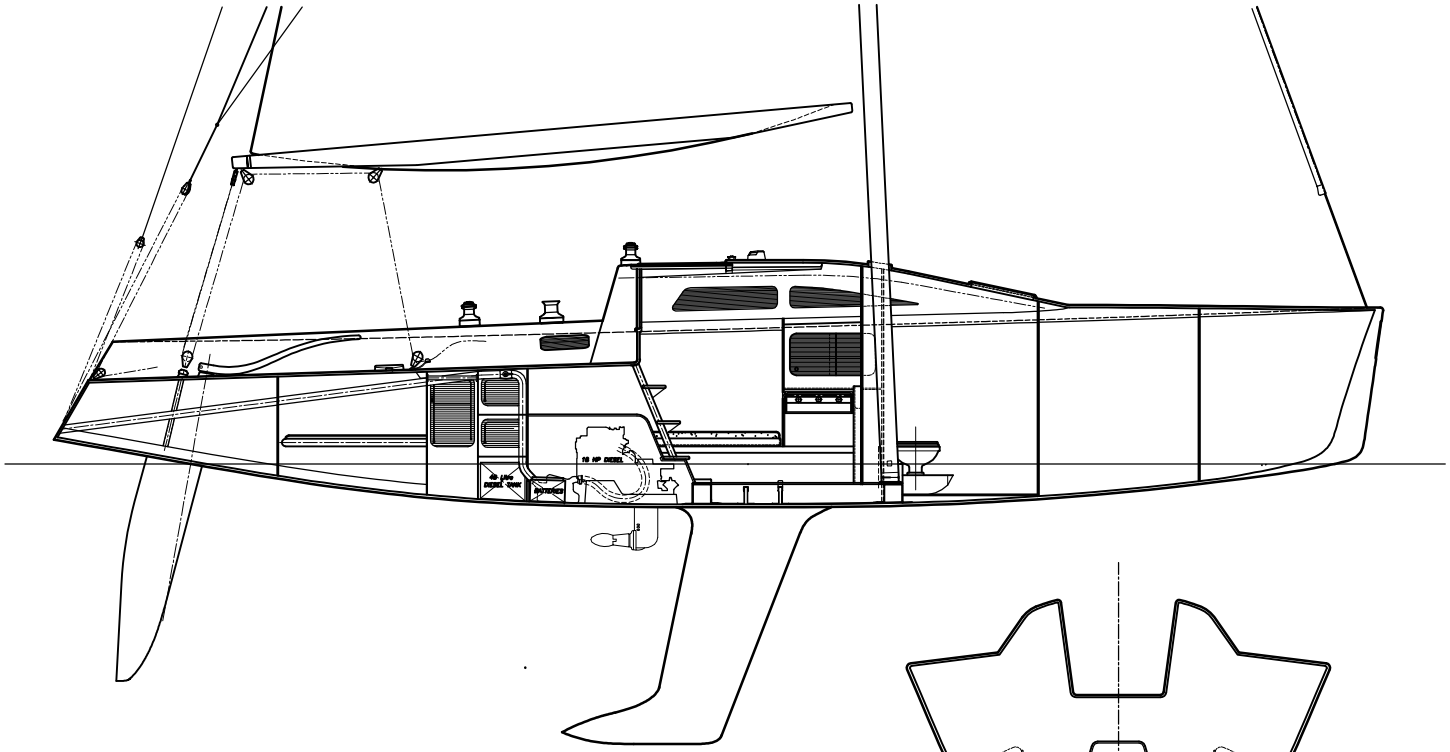

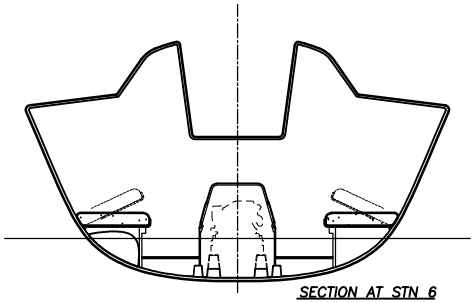

SECTION AT STN 6

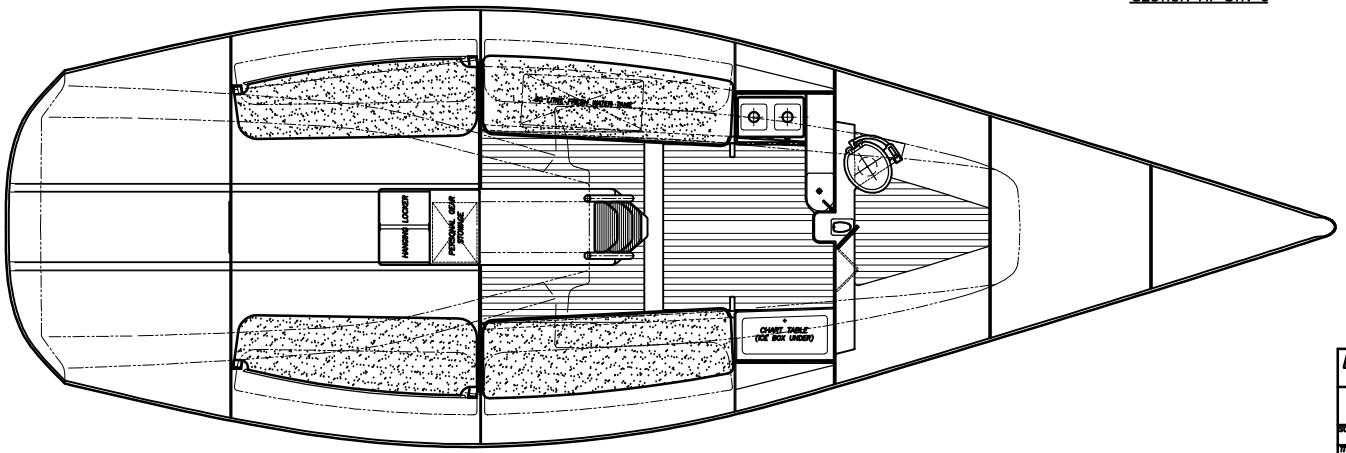

BRUCE FARR® AND ASSOC., INC.

P.O. BOX 4964 ANNAPOLIS, MD. 21403, U.S.A.

34 FT IMS RACING YACHT

SCALE: NOT TO SCALE	DESIGN: 333
TITLE: PROMOTIONAL INTERIOR	COPYRIGHT: 27 APRIL 1998 © BRUCE FARR & ASSOC., INC.
DRAWN BY: JPD	DRAWING: PROMINTR